R95–161

Panel Mount Bracket

For use with the following NTE types:

- **R64 Series**
- **R65 Series**

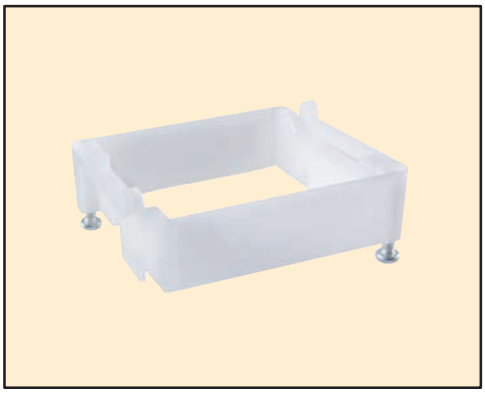

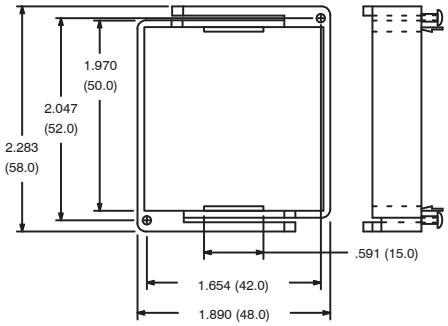

R95–180

12–Pin Heavy Duty Socket

Features

- **Surface Mount**
- **With Pressure Clamp Screws**

Electrical Rating:
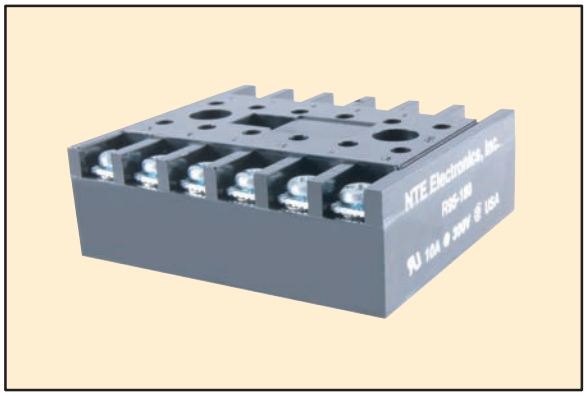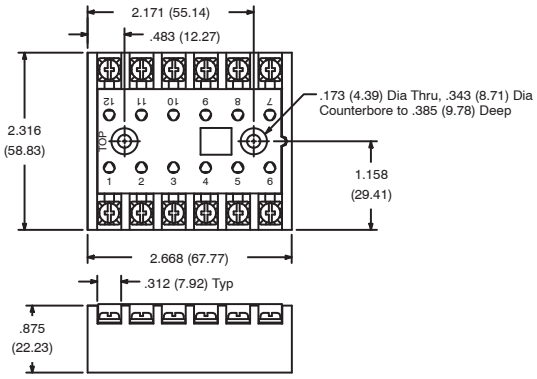
300Volts, 10 Amps