ELECTRONICS, INC.
44 FARRAND STREET
BLOOMFIELD, NJ 07003
(973) 748–5089
http://www.nteinc.com

RoHS
2002/95/EC

NTE30102
LED – Dual Color
3mm Super Fresh Red/Super Yellow Green

Features:
- RoHS Compliant
- Water Clear

Absolute Maximum Ratings: (T_A = +25°C unless otherwise specified)

Power Dissipation, P_d 100mW
Continuous Forward Current, I_F 25mA
Peak Forward Current (1/10 Duty Ratio, 0.1ms Pulse Width), I_{FM}
  Super Fresh Red 50mA
  Super Yellow Green 80mA
Reverse Voltage, VR 5V
LED Junction Temperature, T_j . . . . . +100°C
Operating Temperature Range, T_{opr} . . . . . –25°C to +85°C
Storage Temperature Range, T_{stg} . . . . . –40°C to +100°C
DIP Soldering Temperature (During Soldering, 3mm from body, 5sec max), T_L . . . . . +260°C

Electro–Optical Characteristics: (T_A = +25°C unless otherwise specified)

Parameter	Symbol	Test Conditions	Min	Typ	Max	Unit
View Angle of Half Power	2Θ 1/2	IF = 20mA	–	20	–	deg
Forward Voltage Super Fresh Red	VF	IF = 20mA	–	2.00	2.50	V
Super Yellow–Green			–	2.20	2.50	V
Reverse Current	IR	VR = 5V	–	–	10	μA
Luminous Intensity (Note 1) Super Fresh Red	IV	IF = 20mA	400	1000	–	mcd
Super Yellow–Green			250	600	–	mcd
Peak Emission Wavelength Super Fresh Red	λp	IF = 20mA	–	635	–	nm
Super Yellow–Green			–	575	–	nm
Dominate Wave Length (Note 2) Super Fresh Red	λd(HUE)	IF = 20mA	–	626	–	nm
Super Yellow–Green			–	572	–	nm

Note 1. Luminous intensity is measured with an Exeltron 2001, Tolerance = 30%.
Note 2. The dominate wavelength, λ_d, is derived from the CIE Chromaticity Diagram and represents the color of the device.

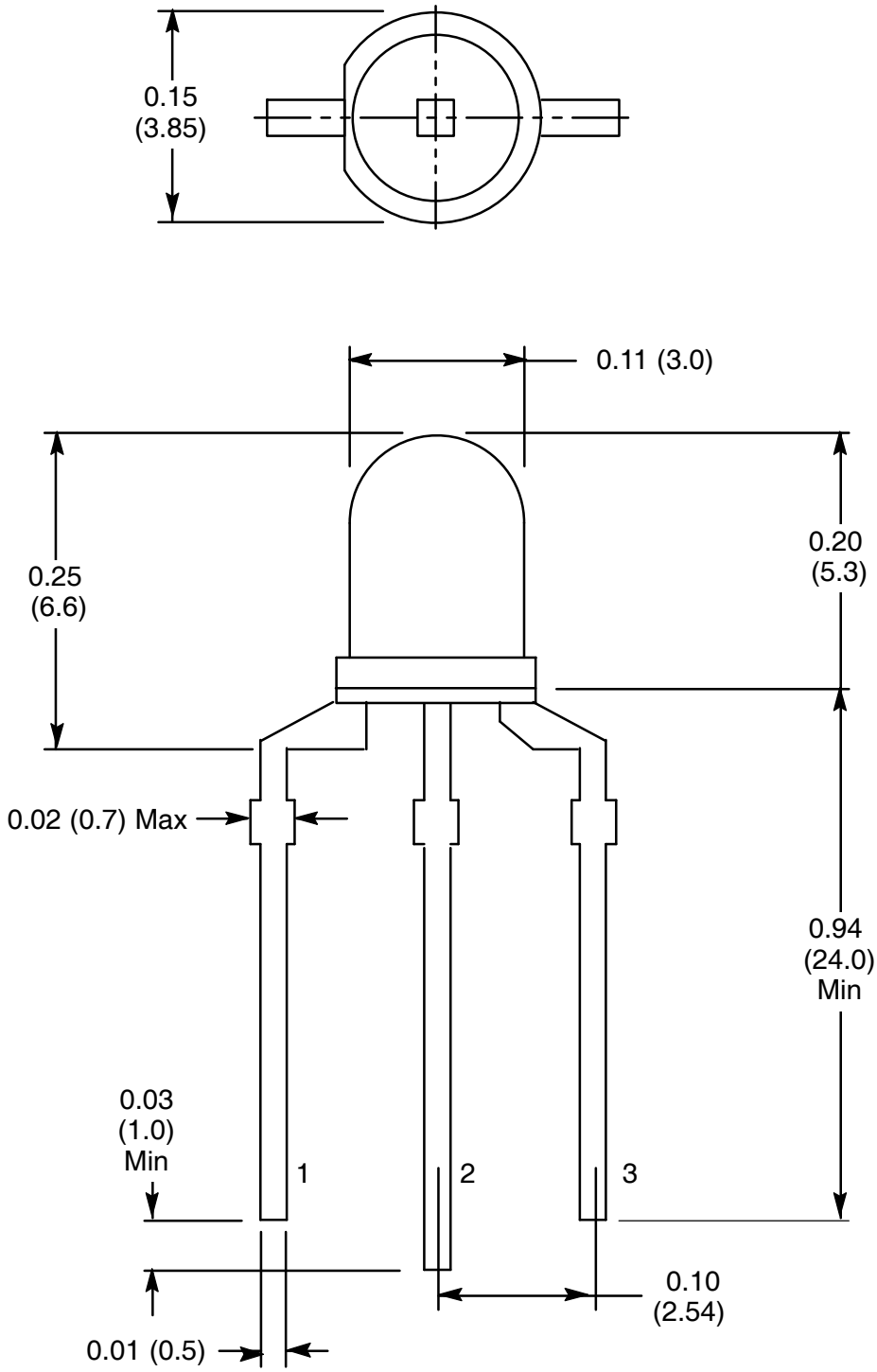

1. Red (Yellow) +
2. Common Lead –
3. Green +